Work Order ID 53337

October 30, 2009 1:33:18 PM

Item ID: PB67-43001-173 **Accept** **Setup Start**

Revision ID: ~~B1~~ C ~~PZELM~~ 09.12.09 **Stop**

Item Name: Cover Plate

Start Date: 11/2/2009 **Start Qty:** 10.00 **Cust Item ID:** ~~PRELIMINARY ISSUE~~

Required Date: 11/23/2009 **Req'd Qty:** 10.00 **Customer:**

Reference:

Approvals: **Process Plan:** MF **Date:** 09-10-30 **Tooling:** _____ **Date:** _____ **Run Start**

QC: _____ **Date:** _____ **SPC (Y/N):** _____ **Date:** _____ **Stop**

Sequence ID/ Work Center ID	Operation Description	Set Up/ Run Hours	Draw Number	Draw Rev.	Plan Code	Accept Qty	Reject Qty	Reject Number	Insp. Stamp
100	FLOW WATER JET	0.00							
Waterjet	Memo	0.00							
FLOW CNC Waterjet	1-Cut as per Dwg B67-43001 ☐Dwg Rev: C ☐Prog Rev: C ☐ ****grain direction along 7.065" ****☐2-Deburr if necessary								
110	QC2- Inspect parts off machine FAI/FAIB	0.00							
QC	Memo	0.00							
Quality Control									
120	QC8- Inspect parts - second check	0.00							
QC	Memo	0.00							
Quality Control									

Draw Nbr	Revision Nbr
B67-43001	Rev ~~B1~~ ~~C PZELM 09.12.09~~ Rev C 1009.22

B 9-12-17

M. 09/12/18 (12X) (17)

B 9-12-17

(42)

Dart Aerospace Ltd

W/O:		WORK ORDER CHANGES					
DATE	STEP	PROCEDURE CHANGE	By	Date	Qty	Approval Chief Eng / Prod Mgr	Approval QC Inspector

Part No: _____ **PAR #:** _____ **Fault Category:** _____ **NCR:** Yes No **DQA:** _____ **Date:** _____

Resolution: _____ **Disposition:** _____ **QA: N/C Closed:** _____ **Date:** _____

NCR:		WORK ORDER NON-CONFORMANCE (NCR)						
DATE	STEP	Description of NC Section A	Corrective Action Section B			Verification Section C	Approval Chief Eng	Approval QC Inspector
			Initial Chief Eng	Action Description Chief Eng	Sign & Date			

NOTE: Date & initial all entries

H:\FORMS\Quality Assurance\approved QA\NCRWO RevE

Work Order ID 53337

October 30, 2009 1:33:18 PM

Item ID: PB67-43001-173
Revision ID: ~~B~~ C ~~[illegible] 09.12.09~~
Item Name: Cover Plate

Accept

Setup **Start**
Stop

Start Date: 11/2/2009 **Start Qty:** 10.00
Required Date: 11/23/2009 **Req'd Qty:** 10.00
Reference:

Cust Item ID:
Customer:

Run **Start**
Stop

Approvals: **Process Plan:** _____ **Date:** _____ **Tooling:** _____ **Date:** _____
QC: _____ **Date:** _____ **SPC (Y/N):** _____ **Date:** _____

Sequence ID/ Work Center ID	Operation Description	Set Up/ Run Hours	Draw Number	Draw Rev.	Plan Code	Accept Qty	Reject Qty	Reject Number	Insp. Stamp
130	NC BRAKE	0.00							
Brake NC	**Memo**	0.00	SB 10/01/07			12	0		
Brake NC	Bend as per Dwg B67-43001								
140	QC5- Inspect part completeness to step on W/O	0.00							
QC	**Memo**	0.00	⇒ S 10/20/08			(+2)	~~0~~		
Quality Control									
150	Chemical Conversion Coat per QSI005 4.1	0.00							
HandFinish	**Memo**	~~0.00~~							
Hand Finishing									

N/A S

Dart Aerospace Ltd

W/O:		WORK ORDER CHANGES					
DATE	STEP	PROCEDURE CHANGE	By	Date	Qty	Approval Chief Eng / Prod Mgr	Approval QC Inspector

Part No: _____ **PAR #:** _____ **Fault Category:** _____ **NCR:** Yes No **DQA:** _____ **Date:** _____

Resolution: _____ **Disposition:** _____ **QA: N/C Closed:** _____ **Date:** _____

NCR:		WORK ORDER NON-CONFORMANCE (NCR)						
DATE	STEP	Description of NC Section A	Corrective Action Section B			Verification Section C	Approval Chief Eng	Approval QC Inspector
			Initial Chief Eng	Action Description Chief Eng	Sign & Date			

NOTE: Date & initial all entries

H:\FORMS\Quality Assurance\approved QA\NCRWO RevE

Work Order ID 53337

October 30, 2009 1:33:18 PM

Item ID: PB67-43001-173
Revision ID: ~~B~~ C ~~[illegible] 01.12.09~~
Item Name: Cover Plate

Accept

Setup **Start**
Stop

Start Date: 11/2/2009 **Start Qty:** 10.00
Required Date: 11/23/2009 **Req'd Qty:** 10.00
Reference:

Cust Item ID:
Customer:

Run **Start**
Stop

Approvals: **Process Plan:** _____ **Date:** _____ **Tooling:** _____ **Date:** _____
QC: _____ **Date:** _____ **SPC (Y/N):** _____ **Date:** _____

Sequence ID/ Work Center ID	Operation Description	Set Up/ Run Hours	Draw Number	Draw Rev.	Plan Code	Accept Qty	Reject Qty	Reject Number	Insp. Stamp
160	Green Sandtex(Ref:4.3.5.8) per QSI005 4.3	0.00							
Powdercoat	MISHKI								
	Memo	0.00							
Powder Coating	START TIME: 8:30 ☐OVEN TEMPERATURE: ~~320~~ ☐FINISH TIME: ~~8:50~~		BR 10-01-11						
170	QC3- Inspect Part Finish	0.00							
QC	Memo	0.00							
Quality Control			10-01-11						
180	Identify as per dwg & Stock Location:_____	0.00							
Packaging	Memo	0.00							
Packaging									

~~10-12-11~~

N/A CL 10/9/23

Dart Aerospace Ltd

W/O:		WORK ORDER CHANGES					
DATE	STEP	PROCEDURE CHANGE	By	Date	Qty	Approval Chief Eng / Prod Mgr	Approval QC Inspector

Part No: _____ **PAR #:** _____ **Fault Category:** _____ **NCR:** Yes No **DQA:** _____ **Date:** _____

Resolution: _____ **Disposition:** _____ **QA: N/C Closed:** _____ **Date:** _____

NCR:		WORK ORDER NON-CONFORMANCE (NCR)						
DATE	STEP	Description of NC Section A	Corrective Action Section B			Verification Section C	Approval Chief Eng	Approval QC Inspector
			Initial Chief Eng	Action Description Chief Eng	Sign & Date			

NOTE: Date & initial all entries

H:\FORMS\Quality Assurance\approved QA\NCRWO RevE

Work Order ID 53337

October 30, 2009 1:33:18 PM

Item ID: PB67-43001-173 **Accept** **Setup Start**

Revision ID: BY ~~CRECH 09-12-09~~ **Stop**

Item Name: Cover Plate

Start Date: 11/2/2009 **Start Qty:** 10.00 **Cust Item ID:**

Required Date: 11/23/2009 **Req'd Qty:** 10.00 **Customer:**

Reference:

Approvals: **Process Plan:** _____ **Date:** _____ **Tooling:** _____ **Date:** _____ **Run Start**

QC: _____ **Date:** _____ **SPC (Y/N):** _____ **Date:** _____ **Stop**

Sequence ID/ Work Center ID	Operation Description	Set Up/ Run Hours	Draw Number	Draw Rev.	Plan Code	Accept Qty	Reject Qty	Reject Number	Insp. Stamp
190	QC5- Inspect part completeness to step on W/O	0.00							
QC	**Memo**	0.00	N/A CL 10/9/23						
Quality Control									
200		0.00							
Purchasing	PURCHASING					CL 10/9/23			(10)
Purchasing	**Memo**	0.00							
	SEND TO TALMAR FOR FOAM AND FABRIC		P/O: 12624						
210	Receive & Inspect for Damage & Mat'l Certs	0.00							
Packaging	**Memo**	0.00							
Packaging									

Dart Aerospace Ltd

W/O:		WORK ORDER CHANGES					
DATE	STEP	PROCEDURE CHANGE	By	Date	Qty	Approval Chief Eng / Prod Mgr	Approval QC Inspector
10-10-05	170	- tulman kept 1 for sample	MF	10-10-05	1	10-20-05	

Part No: _____ **PAR #:** _____ **Fault Category:** _____ **NCR:** Yes No **DQA:** _____ **Date:** _____

Resolution: _____ **Disposition:** _____ **QA: N/C Closed:** _____ **Date:** _____

NCR:		WORK ORDER NON-CONFORMANCE (NCR)						
DATE	STEP	Description of NC Section A	Corrective Action Section B			Verification Section C	Approval Chief Eng	Approval QC Inspector
			Initial Chief Eng	Action Description Chief Eng	Sign & Date			

NOTE: Date & initial all entries

H:\FORMS\Quality Assurance\approved QA\NCRWO RevE

Work Order ID 53337

October 30, 2009 1:33:18 PM

Item ID: PB67-43001-173 **Accept** **Setup Start**

Revision ID: ~~B~~ C ~~[illegible] 09.12.09~~ **Stop**

Item Name: Cover Plate

Start Date: 11/2/2009 **Start Qty:** 10.00 **Cust Item ID:**

Required Date: 11/23/2009 **Req'd Qty:** 10.00 **Customer:**

Reference:

Run Start

Approvals: **Process Plan:** _____ **Date:** _____ **Tooling:** _____ **Date:** _____

Stop

QC: _____ **Date:** _____ **SPC (Y/N):** _____ **Date:** _____

Sequence ID/ Work Center ID	Operation Description	Set Up/ Run Hours	Draw Number	Draw Rev.	Plan Code	Accept Qty	Reject Qty	Reject Number	Insp. Stamp
220	QC6- Inspect dimensions to drawing	0.00							
QC	Memo	0.00							
Quality Control									
230	Identify as per dwg & Stock Location: 432	0.00							
Packaging	Memo	0.00							
Packaging									
240	QC21- Final Inspection - Work Order Release	0.00							
QC	Memo	0.00							
Quality Control									

8/10/10/05 (44)

10/10/05

MF 10-10-05

Dart Aerospace Ltd

W/O:		WORK ORDER CHANGES					
DATE	STEP	PROCEDURE CHANGE	By	Date	Qty	Approval Chief Eng / Prod Mgr	Approval QC Inspector

Part No: _____ **PAR #:** _____ **Fault Category:** _____ **NCR:** Yes No **DQA:** _____ **Date:** _____

Resolution: _____ **Disposition:** _____ **QA: N/C Closed:** _____ **Date:** _____

NCR:		WORK ORDER NON-CONFORMANCE (NCR)						
DATE	STEP	Description of NC Section A	Corrective Action Section B			Verification Section C	Approval Chief Eng	Approval QC Inspector
			Initial Chief Eng	Action Description Chief Eng	Sign & Date			

NOTE: Date & initial all entries

Picklist Print

October 30, 2009 1:33:18 PM

Work Order ID: 53337

Parent Item: PB67-43001-173RevB1

Parent Item Name: Cover Plate

Comments:

Start Date: 11/2/2009 **Required Date:** 11/23/2009

Start Qty: 10.00 **Required Qty:** 10.00

Component Item ID/ Item Name	Replacement Item ID	Mfg/ Purch	Bin Item	Primary Location	Last Location	Route Seq ID	Unit of Measure	Qty on Hand	Remaining Qty To Pick	Qty Issued	Date Issued	Status
M2024T3S.032		Purchased	No			100	sf	203.3122	11.1032		11-9-17	
2024-T3 .032 sheet												

Warehouse Location	Loc Qty	Loc Code	
Main Warehouse			
MAT	203.3122316		
102942	1.5		
105555	4.0684		
106272	5.3		
108595	1.2		
109240	7.02		
110305	144		
110778	18.8996316		
111699	18.3242		
18147	3		
113189			113189

12

Dart Aerospace Ltd

W/O:		WORK ORDER CHANGES					
DATE	STEP	PROCEDURE CHANGE	By	Date	Qty	Approval Chief Eng / Prod Mgr	Approval QC Inspector

Part No: _____ PAR #: _____ Fault Category: _____ NCR: Yes No DQA: _____ Date: _____

Resolution: _____ Disposition: _____ QA: N/C Closed: _____ Date: _____

NCR:		WORK ORDER NON-CONFORMANCE (NCR)						
DATE	STEP	Description of NC Section A	Corrective Action Section B			Verification Section C	Approval Chief Eng	Approval QC Inspector
			Initial Chief Eng	Action Description Chief Eng	Sign & Date			

NOTE: Date & initial all entries

H:\FORMS\Quality Assurance\approved QA\NCRWO RevE

DART AEROSPACE LTD	Work Order:	53337
Description: COVER PLATE	Part Number:	PB6743601-173
Inspection Dwg: PB67-43001-173 Rev: C		Page 1 of 1

FIRST ARTICLE INSPECTION CHECKLIST

[X] First Article [ ] Prototype

Drawing Dimension	Tolerance	Actual Dimension	Accept	Reject	Method of Inspection	Comments
7.19	+/- .030	7.193	✓			
21.50	+/- .030	21.50	✓			
.50	+/- .030	.496	✓			
3.60	+/- .030	3.617	✓			
.037	+/- .010	.035	✓			

Measured by:	KR	Audited by:	S	Prototype Approval:	N/A
Date:	9-12-17	Date:	09/12/18	Date:	N/A

Rev	Date	Change	Revised by	Approved
A		New Issue	KJ/JLM	

#53337

RELEASED

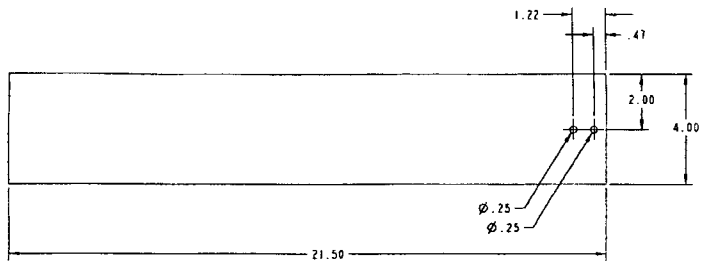

② -169 LONG SUPPORT PLATE

MATL: .090 THK, 6061-T6, QQ-A-250/11
SCALE 0.500

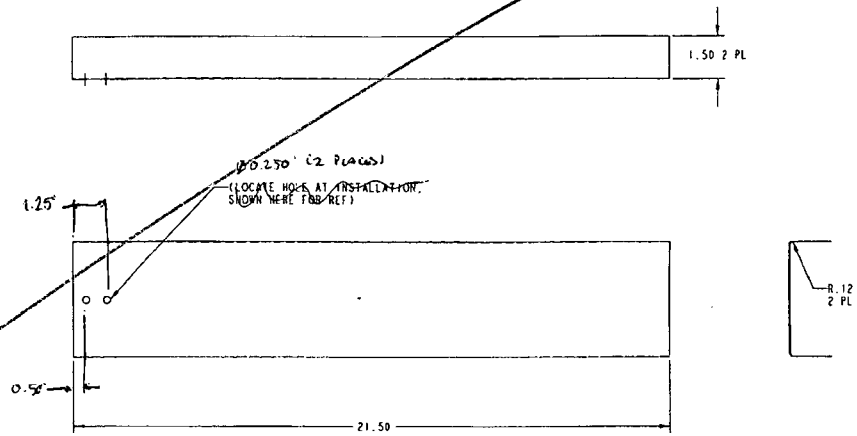

② -173 COVER PLATE

MATL: .032 THK, 2024-T3, QQ-A-250/4
SCALE 0.500

02/12.09

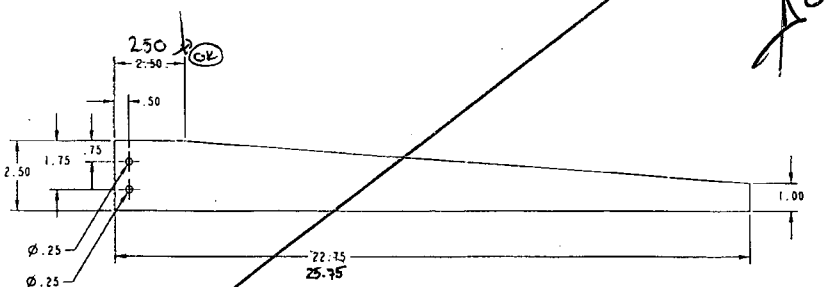

④ -167 LONG SIDE PLATE

MATL: .125 THK, 6061-T6, QQ-A-250/11
SCALE 0.500

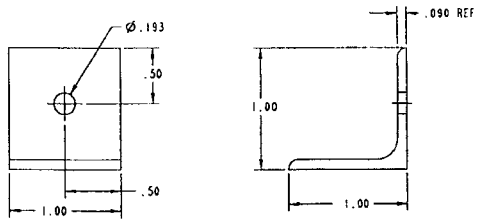

㉔ -171 MOUNTING PLATE

MATL: AND10133-1002, 6061-T6, QQ-A-200/8F
ALT MATL: .090 THK, 6061-T6, QQ-A-250/11
SCALE 2.000

PREMIER AVIATION, INC.
2820 Aviation Parkway, Grand Prairie, Texas 75052

SIZE	CODE IDENT NO	DWG NO	REV
D	0SUV8	B67-43001	B

SCALE: WT: SHEET 27 OF 45

ORIGINAL

Dart Aerospace Ltd

W/O:		WORK ORDER CHANGES					
DATE	STEP	PROCEDURE CHANGE	By	Date	Qty	Approval Chief Eng / Prod Mgr	Approval QC Inspector

Part No: _____ **PAR #:** _____ **Fault Category:** _____ **NCR:** Yes No **DQA:** _____ **Date:** _____

Resolution: _____ **Disposition:** _____ **QA: N/C Closed:** _____ **Date:** _____

NCR:		WORK ORDER NON-CONFORMANCE (NCR)						
DATE	STEP	Description of NC Section A	Corrective Action Section B			Verification Section C	Approval Chief Eng	Approval QC Inspector
			Initial Chief Eng	Action Description Chief Eng	Sign & Date			

NOTE: Date & initial all entries

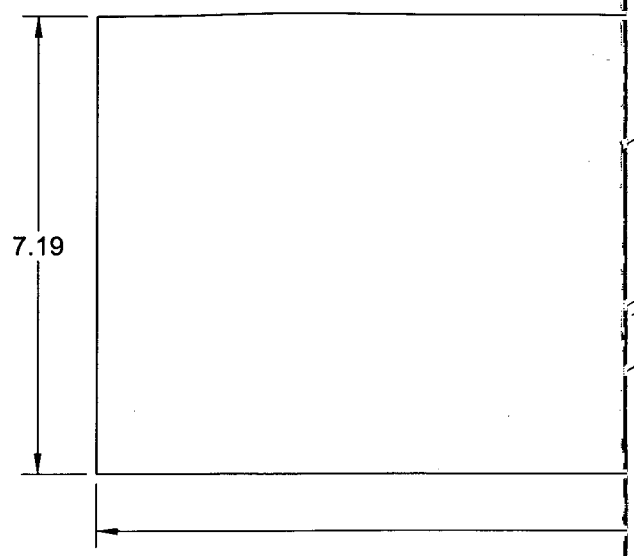

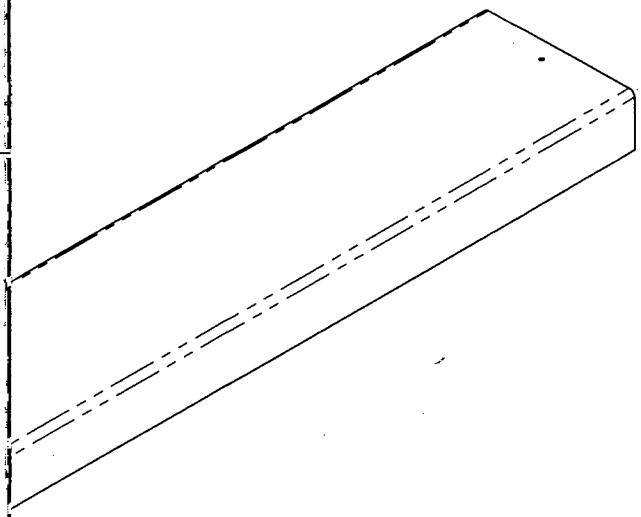

B67-4

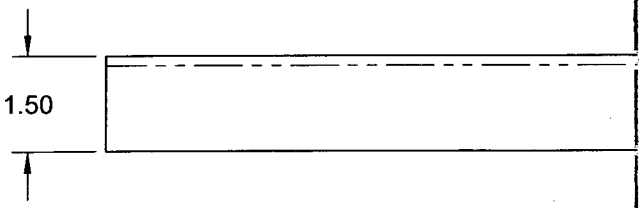

B67-4
(M

PRELIMINARY ISSUE
09.12.09

W/O ID = 53337

NOTES:
1) MATERIAL: 2024-T3 ALUMINUM SHEET, 0.032 THI
PER AMS-QQ-A-250/4 OR AMS 4037
REF. DART SPEC. M2024T3S.032
2) FINISH: CHEMICAL CONVERSION COAT PER DAR
POWDER COAT GREEN SANDTEX (4.3.5.8
3) TOLERANCES: PER DART QSI 018 UNLESS OTHE
4) UNITS: INCHES UNLESS OTHERWISE NOTED
5) BREAK SHARP EDGES: 0.005 TO 0.010 MAX
6) IDENTIFICATION: IDENTIFY WITH DART P/N "B67-
7) WEIGHT: 0.48 lbs

RW	**DART AEROSPACE LTD** HAWKESBURY, ONTARIO, CANADA
	DRAWING NO. B67-43001-173 — REV. C — SHEET 2 OF 2
	TITLE: COVER PLATE — SCALE: NTS
N/A	
9	

ITEM	QTY -173	P/N	DESCRIPTION
1	X	B67-43001-173	COVER PLATE ASSEMBLY
2	1	B67-43001-173B	COVER PLATE
3	A/R	1637-001	SEE NOTE 1.1
4	A/R	1495	SEE NOTE 1.2
5	A/R	LA4009	SEE NOTE 1.3

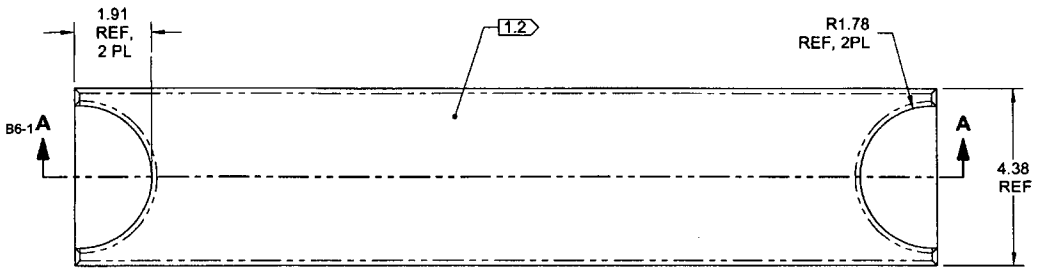

B67-43001-173 COVER PLATE ASSEMBLY

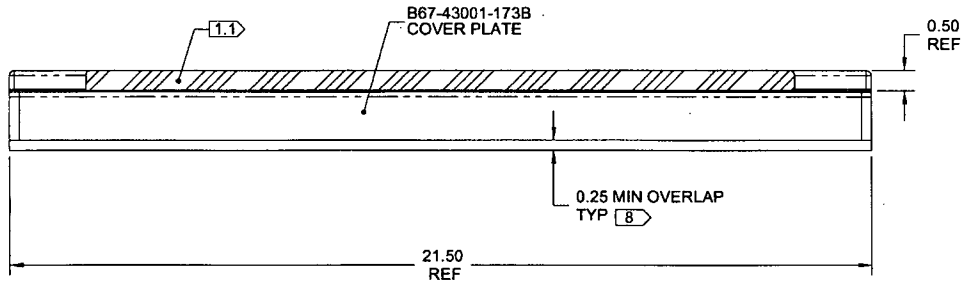

SECTION A-A D8-1

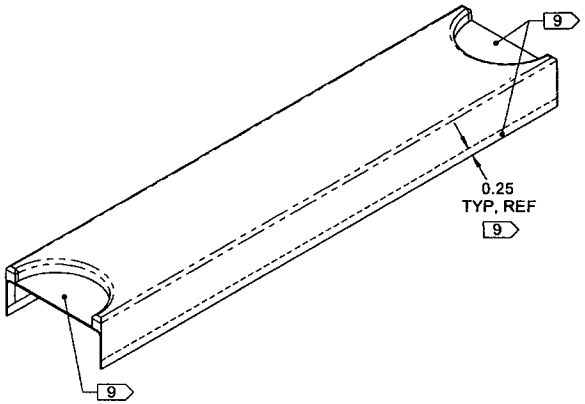

#58337

RELEASED
2010 -09- 16

NOTES:
1) MATERIAL:
1.1) FOAM: ETHYLENE PROPYLENE NEOPRENE SBR CLOSED-CELL, FLAME RETARDANT, 0.50 THICK, PER ASTM D1056 2A2, SERVICE TEMP -40 °F TO +200 °F, COLOUR: BLACK
REF. TULMAR P/N 1637-001
1.2) FABRIC: 100% 420 DENIER NYLON, MIN THREAD COUNT 35X35, POLYURETHANE COATED ONE SIDE, COLOUR: BLACK
REF. TULMAR P/N 1495
1.3) ADHESIVE: URETHANE WITH CATALYST, TWO PART, CLIFTON LA4009
2) FINISH: BOND NEOPRENE TO COVER PLATE USING ADHESIVE. COVER WITH DENIER AS SHOWN.
3) TOLERANCES: PER TABLE 1 (ZN A3-1) UNLESS OTHERWISE NOTED
4) UNITS: INCHES UNLESS OTHERWISE NOTED
5) BREAK SHARP EDGES: N/A
6) IDENTIFICATION: N/A
7) WEIGHT: 0.78 lbs REF
8) DENIER NYLON TO BE BONDED ALL AROUND INNER SIDES OF PLATE
9) DENIER NYLON TO BE BONDED TO PLATE ON OUTER SIDE

TABLE 1 3

TOLERANCES ON FABRIC (PARTS AND ASSEMBLIES)
±1/8: DIMS <2
±1/4: DIMS 2 TO <10
±1/2: DIMS 10 TO <20
±5/8: DIMS 20 TO <40
±1.5%: DIMS EQUAL TO OR > 40

REV.	DESCRIPTION	BY	DATE
C	REDRAWN PREMIER AVIATION DRAWING IAW DART QSI 018, QSI 043 AND TULMAR SAFETY SYSTEMS INC.'S MANUFACTURING PROCESS AND TOLERANCES ON FABRIC; 4.38 WAS 4.25. FOR PREVIOUS REVISONS, REFER TO SHEETS 10 AND 27 OF PREMIER AVIATION DRAWING No. B67-43001. REASON: SEE PAR#09-011.	MB	10.04.27

DESIGN	RW	**DART AEROSPACE LTD** HAWKESBURY, ONTARIO, CANADA
DRAWN		
CHECKED		DRAWING NO. B67-43001-173 — REV. C — SHEET 1 OF 2
MFG. APPR.		
APPROVED		TITLE: COVER PLATE — SCALE: NTS
DE APPR.	N/A	
DATE	10.04.27	

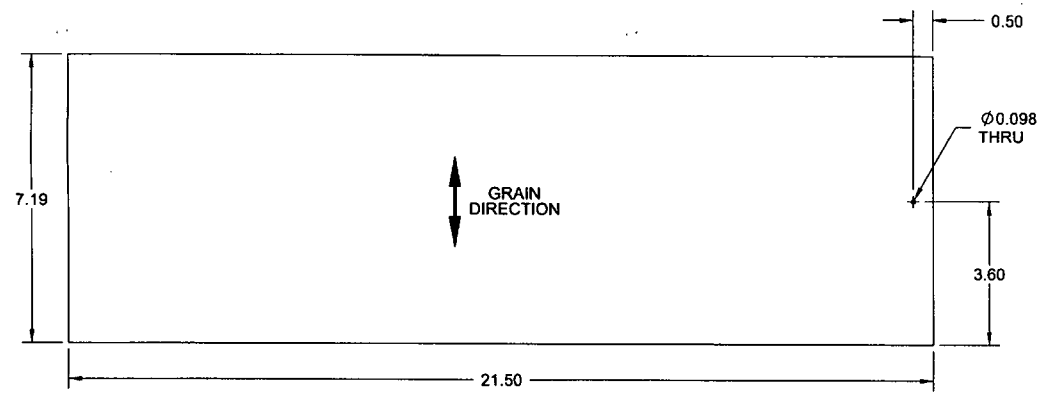

B67-43001-173F FLAT PATTERN

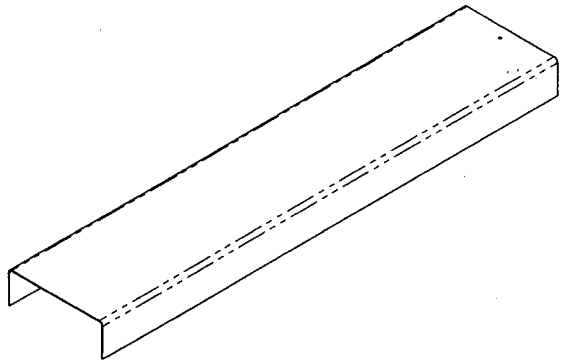

#53357

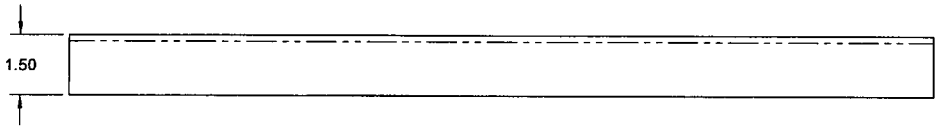

B67-43001-173B BENDING DETAIL
(MAKE FROM B67-43001-173F)

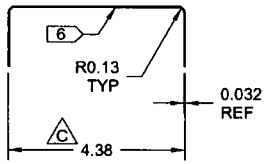

RELEASED
2010 -09- 16

NOTES:
1) MATERIAL: 2024-T3 ALUMINUM SHEET, 0.032 THICK
PER AMS-QQ-A-250/4 OR AMS 4037 OR ASTM B209
REF. DART SPEC. M2024T3S.032
2) FINISH: CHEMICAL CONVERSION COAT PER DART QSI 005 4.1
POWDER COAT GREEN SANDTEX (4.3.5.8) PER DART QSI 005 4.3
3) TOLERANCES: PER DART QSI 018 UNLESS OTHERWISE NOTED
4) UNITS: INCHES UNLESS OTHERWISE NOTED
5) BREAK SHARP EDGES: 0.005 TO 0.010 MAX
6) IDENTIFICATION: IDENTIFY WITH DART P/N "B67-43001-173B" AND B/N "BXXXXX" USING FINE POINT PERMANENT INK MARKER
7) WEIGHT: 0.48 lbs

DESIGN	RW	**DART AEROSPACE LTD** HAWKESBURY, ONTARIO, CANADA
DRAWN		
CHECKED		DRAWING NO. B67-43001-173 — REV. C — SHEET 2 OF 2
MFG. APPR.		
APPROVED		TITLE: COVER PLATE — SCALE: NTS
DE APPR.	N/A	
DATE	10.04.27	

PACKING SLIP

COPY

TULMAR

Tulmar Safety Systems Inc.
1123 Cameron Street
Hawkesbury, ON K6A 2B8 CA
Tel: 613-632-1282
Fax: 613-632-2030
MID : XOTULSAF1123HAW
email: info@tulmar.com

Packing Slip No.
37305
Ship Date
4-Oct-10

Bill To:
Dart Aerospace
1270 Aberdeen Street
Hawkesbury, ON K6A 1K7. Canada

Ship to:
Dart Aerospace
1270 Aberdeen Street
Call Chantal re Pick-Up
Tel: 613-632-9577
Hawkesbury, ON K6A 1K7. Canada

Order number	Sales order date	Account number	Account manager
25447	28-Sep-10	CDART100	Barney Bangs
PO number		**Ship Via**	**Shipping Terms**
PO12624		Pick-Up	FOB HAWKESBURY

Item No. / Description	Quantity ordered	UOM	Qty Shipped/Returned	Quantity on back order
8421-105 Cover Plate, 20°/ Drawing No: B67-43001-73 DWG Rev: C **Lot No:** BATCH0000000005 Qty: 7	7	EA	7	1
8421-101 D-Pad Assembly, Short/ Drawing No: B67-43001-83 DWG Rev: C **Lot No:** BATCH0000000008 Qty: 11	11	EA	11	1
8421-102 D-Pad Assembly, Long/ Drawing No: B67-43001-85 DWG Rev: C **Dart to make new holes themselves **Lot No:** BATCH0000000006 Qty: 3	3	EA	3	1
8421-104 Cover Plate/ Drawing No: B67-43001-173 DWG Rev: C **Lot No:** BATCH0000000008 Qty: 11	11	EA	11	1
8421-103 Cover Plate/ Drawing No: B67-43001-181 DWG Rev: C **Lot No:** BATCH0000000006 Qty: 11	11	EA	11	1

PACKING SLIP

TULMAR

Tulmar Safety Systems Inc.
1123 Cameron Street
Hawkesbury, ON K6A 2B8 CA
Tel: 613-632-1282
Fax: 613-632-2030
MID : XOTULSAF1123HAW
email: info@tulmar.com

Packing Slip No.
37305
Ship Date
4-Oct-10

Bill To:
Dart Aerospace
1270 Aberdeen Street
Hawkesbury, ON K6A 1K7. Canada

Ship to:
Dart Aerospace
1270 Aberdeen Street
Call Chantal re Pick-Up
Tel: 613-632-9577
Hawkesbury, ON K6A 1K7. Canada

Shipper Rick Andrews

Date: 4-OCT-2010.

Certificate of Conformance ☐ Not Applicable ☐ See Certification Enclosed

I hereby certify that the items listed hereon have been inspected, and / or tested (as applicable), conform to all specifications and requirements detailed in the contract or purchase order. Objective evidence to support this statement is on file, and can be made available upon request.
If any questions or concerns, please contact QA Manager @ 613-632-1282 ext. 245.

Authorized Inspector Roxanne Lanthier

Date: Oct 4/10.

E.F. Walter Inc.	CERTIFICAT DE CONFORMITÉ CERTIFICATE OF COMPLIANCE		Approved JR Date 1/3/02
Revision # 0	Revision date: January 30, 2002	Doc # F.7.5.5.A	Page 1 of 1

Date : 09/09/2008

VENDU À
SOLD TO 6048

TULMAR SAFETY SYSTEMS INC.
1123 CAMERON STREET
HAWKESBURY ONT
K6A 2B8

FOURNISSEUR
VENDOR

E.F. WALTER INC.
180 BARTOR ROAD
TORONTO, ONTARIO
M9M 2W6

Commande / Order # 14649-00

Notre / Our Reference # 55968

Nous certifions par la présente que la totalité du matériel inscrit ci-dessous a été inspecté et vérifié et est conforme aux devis et aux normes mentionnés sur votre commande.
We hereby certify that all of the material listed below has been inspected and tested and conforms to the drawings and / or specifications stated on your purchase order.

Item	Quantité Quantity	Pièce # Part #	Description
742050005	8.000 PCS	# 1637-001	SPONGE NEOPRENE BLACK SC42 TRIMMED NO SKIN (1/2" x 54" x 72") ASTM D1056, 2A2
			8/10/10/05
			LOT # 75570 MANUFACTURING DATE: Sept. 5, 2008

used on TSS 8421-101 (B67-43001-83)
102 (B67-43001-85)
103 (B67-43001-181)
104 (B67-43001-173)
105 (B67-43001-73)

Signé
Signed

09/09/2008

TSS # 1637-001 /02

J. ENNIS FABRICS LTD.

Wholesale Distributor of Textiles and Supplies

March 9, 2010

Fax To: Tulmar Safety Systems
Fax: 613-632-2030
Attention: Sandra Nadeau

EDMONTON HEAD OFFICE
12122 - 68 Street
Edmonton, AB T5B 1R1
Canada
Phone: (780) 474-5721

TORONTO
6300 Kenway Drive
Mississauga, ON L5T 2N3
Canada

CALGARY
2nd Floor, 337 - 17 Avenue SW
Calgary, AB T2S 0A5
Canada

VANCOUVER
13911 Bridgeport Road
Richmond, BC V6V 1J6
Canada

MONTRÉAL
9280 boulevard du Golf
Anjou, QC H1J 3A1
Canada

Certificate of Conformance

Re: PO 17505-00 for Oxford 7 Black

The goods shipped on P/O 17505-00 are as per sampled goods. Specification as follows:
As per mill documentation:

Oxford 7 black is in compliance with the following standards:

Width: Product is 58 inches Wide.

Roll Size: Average Roll Length is 75 Yards.

Weight: Product Weight is 6.79 Ounces per Sq.Yd. /Product Weight is 10.94 oz per Lin.Yd

Content: 100% Nylon

Coating: Product has a Polyurethane Coating {approximately 0.65 oz/ Sq.Yd. (18.5g/sq.yd.)}

Denier: Yarn is 420 Denier.

Thread Count: Construction is 62 x 38 Threads per Square Inch

Protective Finish: Product is Water Repellent

Hydro Resist: AATCC 127 (Suter): Average 800 mm

Solrolor

Piece # 105255723, **Manufacture Date:** 12/30/09, **Lot Number:** 379360
Piece # 105255723, **Manufacture Date:** 12/30/09, **Lot Number:** 379360
Piece # 105255749, **Manufacture Date:** 12/30/09, **Lot Number:** 379360

used on TSS 8421-105 (B67-43001-73)
8421-101 (B67-43001-83)
8421-102 (B67-43001-85)
8421-104 (B67-43001-173)
8421-103 (B67-43001-181)

Sincerely,
J. Ennis Fabrics Ltd.

S. James

Sharon James
Product Development

TSS 1495/17

FAXED 6-15-10

CLIFTON Adhesive, Inc

Industrial Adhesives & Coatings

Date: 6/11/10

Certificate of Compliance

This letter certifies that 11 x 5 gallon pails of LA4009 Adhesive,

lot number (s) 10-145 was shipped to you on 6/11/10. 5 10/10/05

Clifton Adhesive, Inc manufactured this material according to internal specifications which include quality control and assurance procedures. The material was manufactured on 5/25/10 against your Purchase Order # 17863-00.

Shelf Life: 1 year from date of manufacture
Expiration Date: 5/25/11

This letter certifies that 4 x quart cans of CATUR Accelerator,

Lot number 10-138 was shipped to you on 6/11/10.

Clifton Adhesive, Inc manufactured this material according to internal specifications which include quality control and assurance procedures. The material was manufactured on 5/18/10 against your Purchase Order # 17863-00.

Shelf Life: 6 months from date of manufacture
Expiration Date: 11/18/10

Sincerely,

Dan Constantino

Daniel Constantino
Quality Assurance Mgr/ISO Coordinator

ISO 9001:2000 SGS

48 Burgess Place ▪ Wayne, NJ 07470 USA
Phone: 973-694-0845 ▪ Fax: 973-694-5678
www.cliftonadhesive.com

used on TSS 8421-101 (B67-43001-83)
102 (B67-43001-85)
103 (B67-43001-181)
104 (B67-43001-173)
105 (B67-43001-731

TSS 7/22/37

2

American & Efird Inc.
Post Office Box - 507
Mount Holly, NC -28120

Test Report

Date : 9/17/2010

Mfg. Date : 3/27/2010

Quantity: 43

Lot Id : 705150

Product : Tex 90 BONDED 'Z' NYLON FILAMENT Black AA 63002 16 OZ

Specification : A-A-59826 TPII CLA F BT92N4

Customer Order Number : 17499-00

Customer : Tulmar Safety Inc.

Shipped To : Tulmar Safety Inc.

Plys (Visual) : 4

Twist Direction : Z

A&E Color : 63002 Black AA

Description : Bright, Continuous Multifilament Nylon, Melting Point >472F; Colorless Nylon Polymer Bond; Polypropylene Spools

Characteristic	Test1	Test2	Test3	Test4	Test5	Average	Minimum	Maximum
Strength #1 (Pound)	15.2	15.7	15.6	15.7	15.8	15.619		
Strength #2 (Pound)	15.4	15.1	15.2	15.4	14.8	15.177		
Average Strength (Pound)						15.4	11.8	
Elongation #1 (Percent)	20.5	22.4	21.8	22	21.8	21.722		
Elongation #2 (Percent)	22.3	21.4	21.9	22.5	21.1	21.856		
Average Elongation (Percent)						21.8		26
Lube						Pass	Pass	
Twist S #1 (Turns per inch)	12.2	12.2	12.2	12.2	12.2	12.2		
Twist S #2 (Turns per inch)	12.2	12.2	12.2	12.2	12.2	12.2		
Average Twist S (Turns per inch) Initial Twist						12.2		
Twist Z #1 (Turns per inch)	8.1	8.1	8.1	8.1	8.1	8.1		
Twist Z #2 (Turns per inch)	8.1	8.1	8.1	8.1	8.1	8.1		
Average Twist Z (Turns per inch) Final Twist						8.1	5.5	
Yield #1 (Yards/Pound)	4211.8					4211.8		
Yield #2 (Yards/Pound)	4114.7					4114.7		
Average Yield (Yards/Pound)						4163.2	3601	5200
Laundry #1 (Grading Scale)	5					5		
Laundry #2 (Grading Scale)	5					5		
Average Laundry (Grading Scale)						5	3	

used on TSS 8421-101 (B67-43001-83)

TSS #2530/48

Dry Cleaning #1 (Grading Scale)	5	5	
Dry Cleaning #2 (Grading Scale)	5	5	
Average Dry Cleaning (Grading Scale)		5	3
Perspiration #1 (Grading Scale)	5	5	
Perspiration #2 (Grading Scale)	5	5	
Average Perspiration (Grading Scale)		5	3
Color Fastness to Light #1 (Grading Scale)	5	5	
Color Fastness to Light #2 (Grading Scale)	5	5	
Average Color Fastness to Light (Grading Scale)		5	3.4

I certify that the above test were performed under my supervision and in accordance with the specification test requirements and that the reported test results are true, valid and applicable to the samples tested. I further certify that these samples were the only samples tested from the lot of components identified above.

Signed : Joseph D. Munday

Joseph D. Munday
Testing Director

Note : This Certificate of Compliance is the property of American & Efird Inc. and may not be reproduced except in it's entirety.

BS # 2530/48

J. ENNIS FABRICS LTD.

Wholesale Distributor of Textiles and Supplies

March 9, 2010

Fax To: Tulmar Safety Systems
Fax: 613-632-2030
Attention: Sandra Nadeau

EDMONTON HEAD OFFICE
12122 - 68 Street
Edmonton, AB T5B 1R1
Canada
Phone: (780) 474-5721

TORONTO
5300 Kenway Drive
Mississauga, ON L5T 2N3
Canada

CALGARY
2nd Floor, 337 - 17 Avenue SW
Calgary, AB T2S 0A5
Canada

VANCOUVER
13911 Bridgeport Road
Richmond, BC V6V 1J6
Canada

MONTRÉAL
9280 boulevard du Golf
Anjou, QC H1J 3A1
Canada

Certificate of Conformance

Re: PO 17505-00 for Oxford 7 Black

The goods shipped on P/O 17505-00 are as per sampled goods. Specification as follows:
As per mill documentation:

Oxford 7 black is in compliance with the following standards:

Width: Product is 58 inches Wide.

Roll Size: Average Roll Length is 75 Yards.

Weight: Product Weight is 6.79 Ounces per Sq.Yd. /Product Weight is 10.94 oz per Lin.Yd

Content: 100% Nylon

Coating: Product has a Polyurethane Coating {approximately 0.65 oz/ Sq.Yd. (18.5g/sq.yd.)}

Denier: Yarn is 420 Denier.

Thread Count: Construction is 62 x 38 Threads per Square Inch

Protective Finish: Product is Water Repellent.

Hydro Resist: AATCC 127 (Suter): Average 800 mm

Piece # 105255723, **Manufacture Date:** 12/30/09, **Lot Number:** 379360
Piece # 105255723, **Manufacture Date:** 12/30/09, **Lot Number:** 379360
Piece # 105255749, **Manufacture Date:** 12/30/09, **Lot Number:** 379360

used on TSS 8421-105 (B67-43001-73)
8421-101 (B67-43001-83)
8421-102 (B67-43001-85)
8421-104 (B67-43001-173)
8421-103 (B67-43001-181)

Sincerely;
J. Ennis Fabrics Ltd.

S. James

Sharon James
Product Development

TSS 1495/17

Dry Cleaning #1 (Grading Scale)	5	5	
Dry Cleaning #2 (Grading Scale)	5	5	
Average Dry Cleaning (Grading Scale)		5	3
Perspiration #1 (Grading Scale)	5	5	
Perspiration #2 (Grading Scale)	5	5	
Average Perspiration (Grading Scale)		5	3
Color Fastness to Light #1 (Grading Scale)	5	5	
Color Fastness to Light #2 (Grading Scale)	5	5	
Average Color Fastness to Light (Grading Scale)		5	3.4

I certify that the above test were performed under my supervision and in accordance with the specification test requirements and that the reported test results are true, valid and applicable to the samples tested. I further certify that these samples were the only samples tested from the lot of components identified above.

Signed : Joseph D. Munday

Joseph D. Munday
Testing Director

Note This Certificate of Compliance is the property of American & Efird Inc. and may not be reproduced except in it's entirety.

BS # 2530/48 (2)

E.F. Walter Inc.	CERTIFICAT DE CONFORMITÉ CERTIFICATE OF COMPLIANCE		Approved JR Date 1/3/02
Revision # 0	Revision date: January 30, 2002	Doc # F.7.5.5.A	Page 1 of 1

Date : 09/09/2008

VENDU À
SOLD TO 6048

TULMAR SAFETY SYSTEMS INC.
1123 CAMERON STREET
HAWKESBURY ONT
K6A 2B8

FOURNISSEUR
VENDOR

E.F. WALTER INC.
180 BARTOR ROAD
TORONTO, ONTARIO
M9M 2W6

Commande / Order # 14649-00

Notre / Our Reference # 55968

Nous certifions par la présente que la totalité du matériel inscrit ci-dessous a été inspecté et vérifié et est conforme aux devis et aux normes mentionnés sur votre commande.
We hereby certify that all of the material listed below has been inspected and tested and conforms to the drawings and / or specifications stated on your purchase order.

Item	Quantité Quantity	Pièce # Part #	Description
742050005	8.000 PCS	# 1637-001	SPONGE NEOPRENE BLACK SC42 TRIMMED NO SKIN (1/2" x 54" x 72") ASTM D1056, 2A2
			LOT # 75570 MANUFACTURING DATE: Sept. 5, 2008

used on TSS 8421-101 (B67-43001-83)
102 (B67-43001-85)
103 (B67-43001-181)
104 (B67-43001-173)
105 (B67-43001-73)

Signé
Signed

09/09/2008

Tr. # 11027 . 001 / 07